HSF

NOTES:
1.Current Rating: 3A Max(22AWG Test);
2.Contact Resistance: 20mΩ Max;
3.Operating Temperature: −40°C to +125°C;
4.Contact Material: Copper Alloy;
5.Contact plating:
S4: 15μ" Gold on contact area (See ordering information),
50μ" Nickel underplating overall;
6.Wire Size Range: 22−28AWG;
7.Insulation range: 1.9−1.08mm;

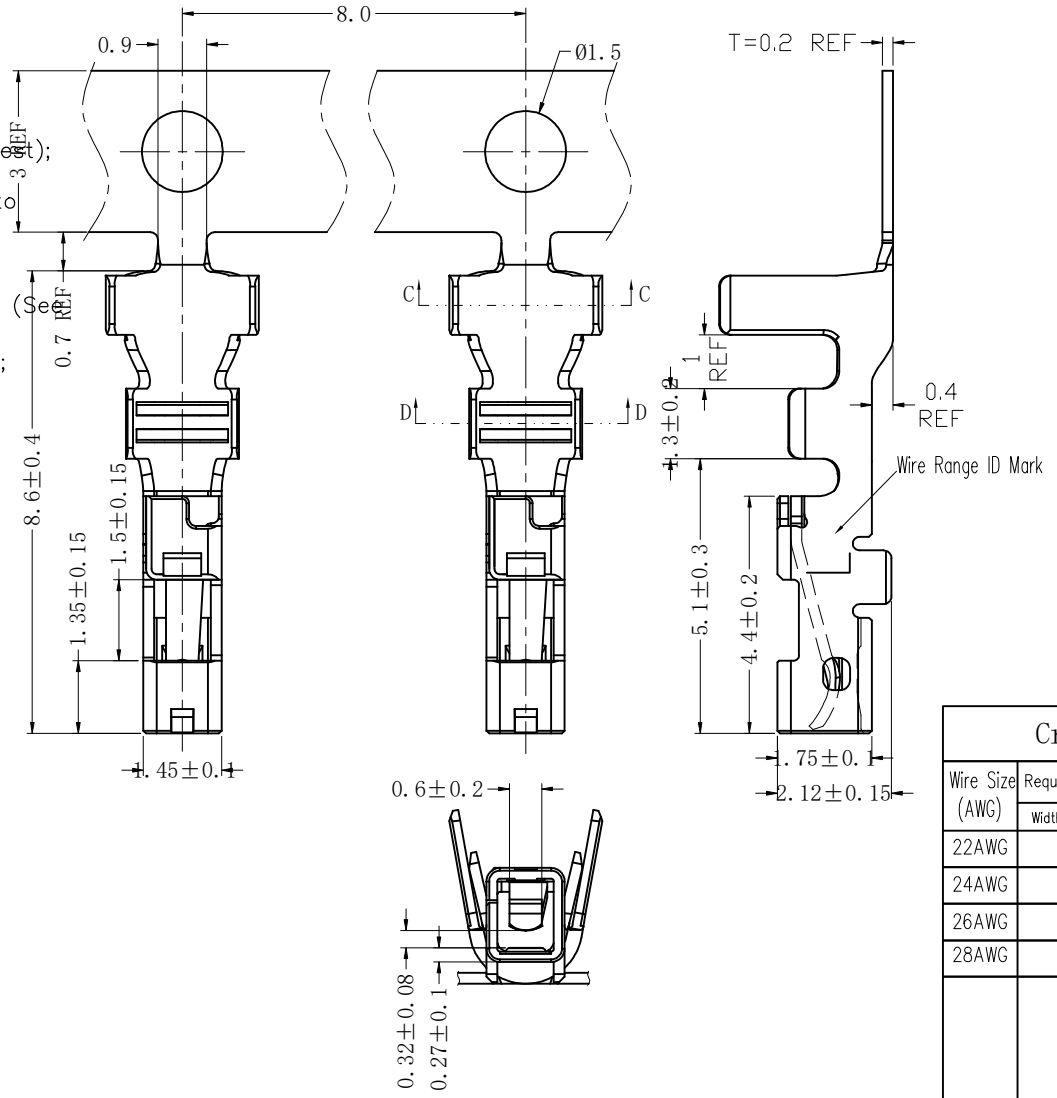

SCHEMATIC DIAGRAM OF TERMINAL DISCHARGE

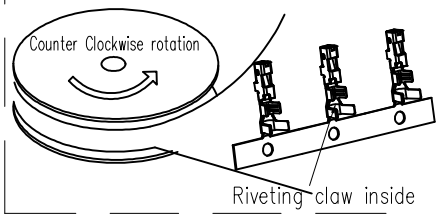

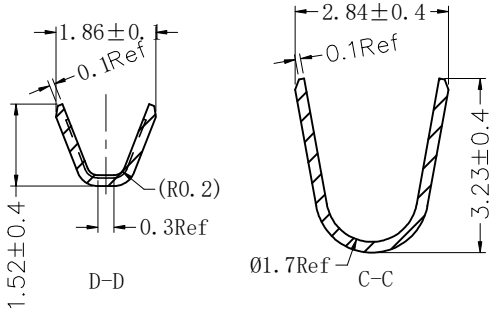

Ordering Information

WD3500- 3 T P 22 S4 01

- 3 = 3=Cutting + Electroplate+Forming
- T = Terminal
- P = Material: P=C5191
- 22 = Wire Size Range: 22−28AWG
- S4 = Contact Plating: S4=15μ" Gold/Ni
- 01 = WCON internal code

Crimping size of wire terminals for refenc

Wire Size (AWG)	Required Crimping Size at Wire Barrel		Required Crimping Size at Insulation Barrel	
	Width(+/−0.05mm)	Height(+/−0.05mm)	Width(+/−0.05mm)	Height(+/−0.05mm)
22AWG	1.35	0.78	1.55MAX	1.80MAX
24AWG	1.30	0.70	1.55MAX	1.70MAX
26AWG	1.25	0.60	1.35MAX	1.70MAX
28AWG	1.25	0.55	1.35MAX	1.70MAX

SECTION:C-C

22Awg Compression ratio : 87.1%
24Awg Compression ratio : 86.8%
26Awg Compression ratio : 86.2%
22Awg Compression ratio : 86.1%

SECTION:D-D

REV	DATE	MODIFICATION DESCRIPTION	CHANGE
A1	2023.06.05	Increase schematic	——
A0	2021.09.25	NEW	——

OPERATION	
X.X	±0.40
X.XX	±0.25
X.XXX	±0.15
Angle	± 3°
DIM	TOL

DRAW	kevin-xin	DATE	2023.06.05	SCALE	FIT
CHECK		DATE		UNIT	mm
APPROVE		DATE		SIZE	A4
				SHEET	1/1
				PROJ.	

PART NO. WD3500-3TP22S401

TITLE: 3.5X3.3mm Dyn. Female Crimp Terminal (22-28AWG) Plating-Gold

Customer NO.

WCON

Http: www.wcon.com

WCON-Dongguan
Tel: +86 769 85358920
Fax: +86 769 85358915
E-mail: sales@wcon.com

WCON-Kunshan
Tel: +86 512 57468408
Fax: +86 512 57468468
E-mail: salesks@wcon.com