HSF

NOTES:
Current Rating: 1.0AMP
Contact Resistance: 35mΩ Max
Withstand Voltage: 500V AC/Minute
Insulation Resistance: 500MΩ Min
Operation Temperature: −65℃ to +125℃

Contact Material:Phosphor Bronze
Contact plating:Au Or Sn over Ni
Insulator Material:PBT+30%G.F UL94V−0

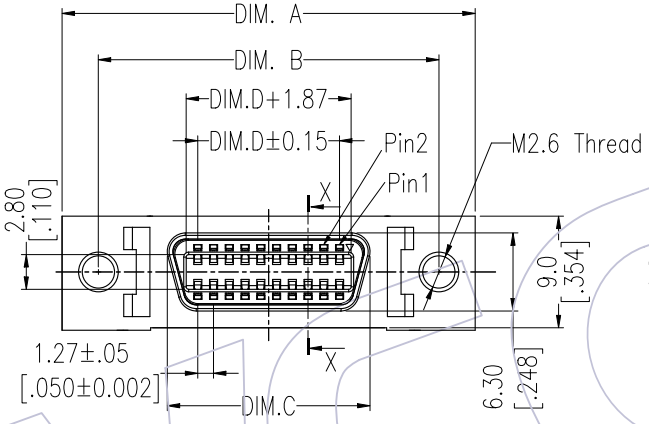

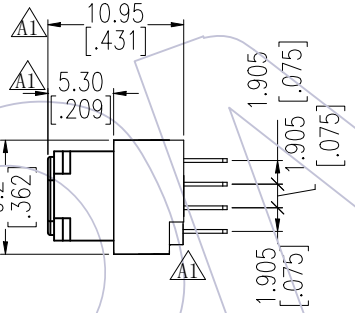

Recommended P.C.B Layout(Top Side)
(PCB BOARD TOLERANCE±0.05)

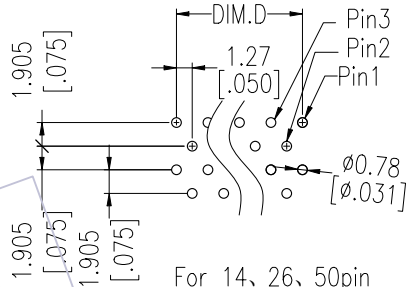

For 14、26、50pin

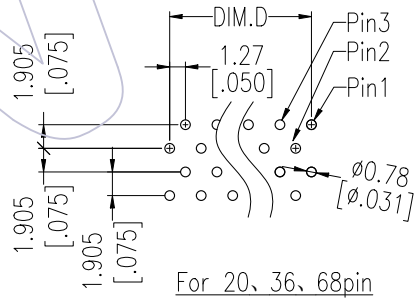

For 20、36、68pin

Ordering Information

6321- XXX S D XX M N X 0X

No.of Pins	Contact Plating	Packing
14 36	S1=3u"Gold/Tin	A:Tray
20 50	S2=5u"Gold/Tin	
26 68	S3=10u"Gold/Tin	
	S4=15u"Gold/Tin	
	S5=30u"Gold/Tin	

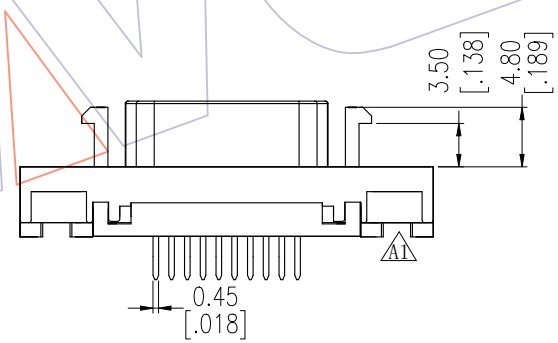

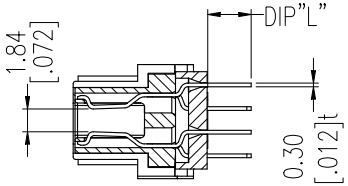

SECTION X−X
SCALE 1:1

Part No.	DIP L
6321−XXXSDXXMNX01	3.10
6321−XXXSDXXMNX02	3.50

POS.	DIM.A	DIM.B	DIM.C	DIM.D	DIM.E
68	63.88	57.93	46.91	41.91	53.65
50	52.45	46.50	35.48	30.48	42.22
36	43.70	37.63	26.59	21.59	33.37
26	37.13	31.28	20.24	15.24	27.18
20	33.32	27.47	16.43	11.43	23.37
14	29.51	23.66	12.62	7.62	19.56

REV	DATE	MODIFICATION DESCRIPTION	CHANGE
A1	2017/02/17	modify	------
A0	2013/12/30	NEW	------

OPERATION	
X.X	±0.40
X.XX	±0.25
X.XXX	±0.15
Angle	± 3°
DIM	TOL

DRAW	Surong Xu	DATE	2017/02/17
CHECK		DATE	
APPROVE		DATE	

SCALE	FIT
UNIT	mm
SIZE	A4
SHEET	1/1
PROJ.	

PART NO. 6321−XXXSDXXMNX0X

TITLE: 1.27PITCH CEN 180° TYPE SCSI FEMALE

Customer NO.

WCON
Http: www.wcon.com

WCON−Dongguan
Tel: +86 769 85358920
Fax: +86 769 85358915
E−mail: sales@wcon.com

WCON−Kunshan
Tel: +86 512 57468408
Fax: +86 512 57468468
E−mail: salesks@wcon.com