HSF

NOTES:
Current Rating: 3.0AMP
Contact Resistance: 20mΩ Max
Withstand Voltage: 1000V AC/DC
Insulation Resistance: 1000MΩ Min
Operation Temperature: −40℃ to +105℃

Contact Material: Phosphor Bronze
Contact plating: Sn over Ni or Au over Ni

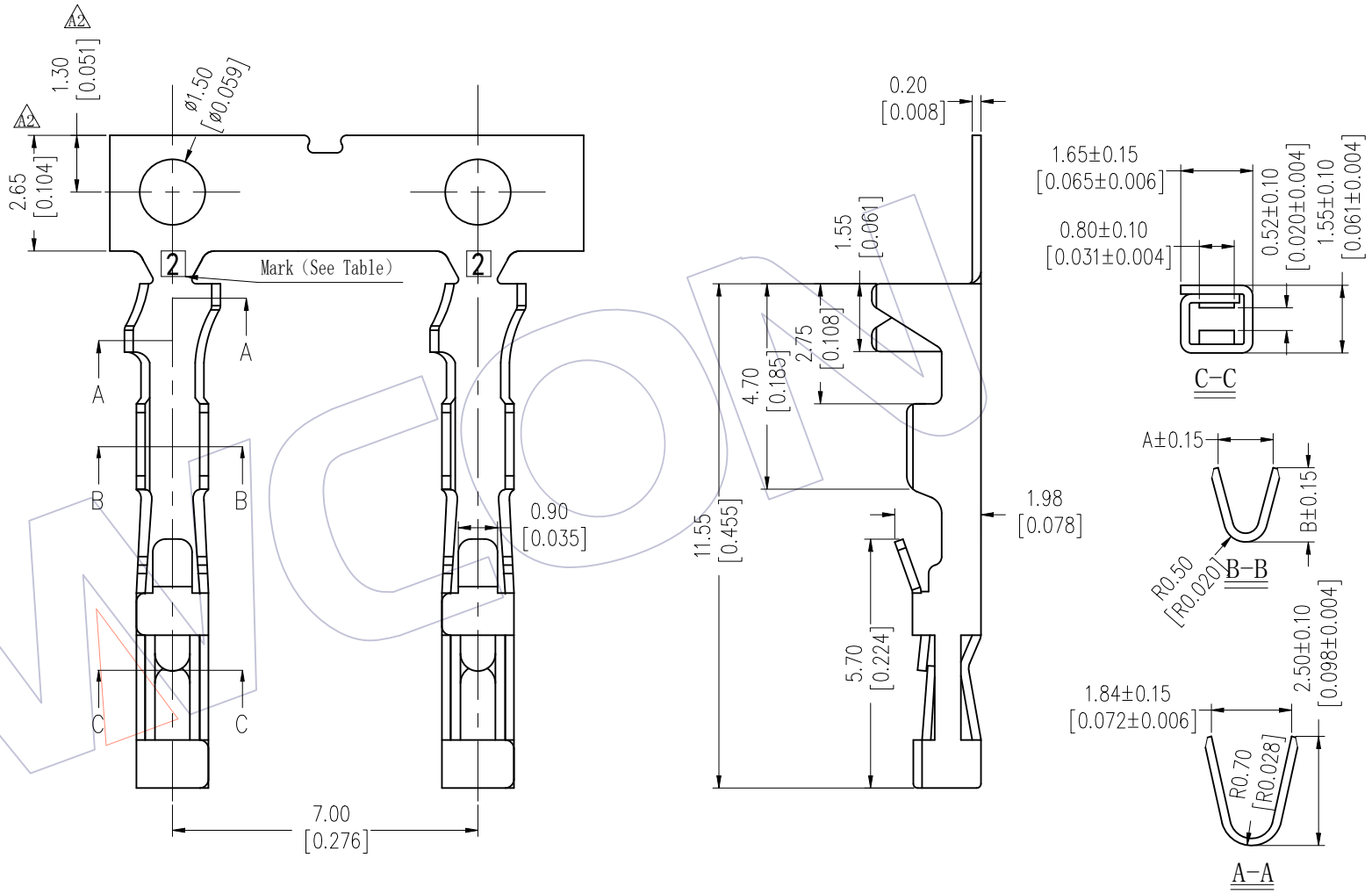

Ordering Information

3210-T P XX 0X

Contact Plating
S0=Gold Flash/Tin
S3=10u"Gold/Tin
S4=15u"Gold/Tin
S5=30u"Gold/Tin
SN=Tin

A2

PART NO.	MARK	(AWG#)	DIMA	DIMB
3210-TPXX01	1	22~24	1.26	1.70
3210-TPXX02	2	26~28	1.10	1.30

REV	DATE	MODIFICATION DESCRIPTION	CHANGE
A2	2021/03/01	Modify size Add 22(AWG#)	DuYing
A1	2019/10/26	Add wire Range A1	SU
A0	2012/10/08	NEW	------

OPERATION	
X.X	±0.40
X.XX	±0.25
X.XXX	±0.15
Angle	± 3°
DIM	TOL

DRAW DuYing	DATE 2021/03/01	SCALE	FIT
CHECK	DATE	UNIT	mm
		SIZE	A4
APPROVE	DATE	SHEET	1/1
		PROJ.	

3210-TPXX0X

TITLE:
2.54mm "T" TYPE HOUSING Contact

Customer NO.

WCON
Http: www.wcon.com

WCON-Dongguan
Tel: +86 769 85358920
Fax: +86 769 85358915
E-mail: sales@wcon.com

WCON-Kunshan
Tel: +86 512 57468408
Fax: +86 512 57468468
E-mail: salesks@wcon.com