NOTES:
Rated Current: 9.0AMP
Contact Resistance: 30mΩ max
Withstand Voltage: 1500V AC/DC
Insulation Resistance: 1000MΩ min
Operation Temperature: −25℃ to +85℃

Contact Material: Brass
Contact plating: Au Or Sn Over Ni
Insulator Material: PA66(White Transparent UL94−V2 std)Or PA46(Natutal UL94−V0)

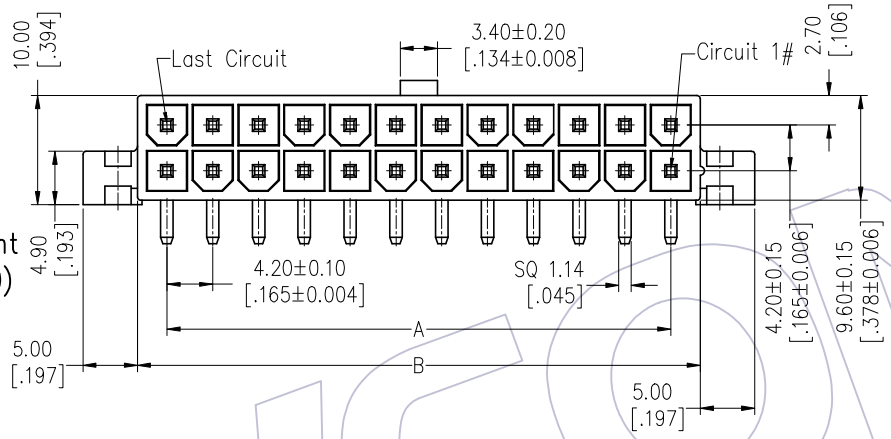

Recommended P.C.B Layout(Top Side)
(PCB BOARD TOLERANCE±0.05)

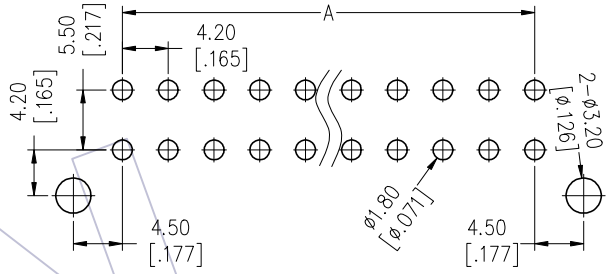

A1

PART NO.	PIN	A	B	Material
WF4202-2WRHXXXX3	2*5P及以下	+0.30 −0.10	+0.40 −0.20	PA46
	2*5P以上	+0.50 −0.00	+0.60 −0.00	
WF4202-2WRXXXX3	2*1P-2*12P	±0.20	±0.30	PA66

Ordering Information

WF4202 -2WR__ XX__ W A 3

- No.of Row: Dual Row
- No.of pins: 01~12P
- Insulation Material: H=PA46, Blank=PA66
- Contact Plating: S0=Gold Flash/Tin, S3=10u"Gold/Tin, S4=15u"Gold/Tin, S5=30u"Gold/Tin, G0=Gold Flash, G3=10u"Gold, G4=15u"Gold, G5=30u"Gold, Blank=Tin
- Color: B=Black, T=Natutal, W=Transparent (A2)
- Packing: 0=PE Bag, A=Tray

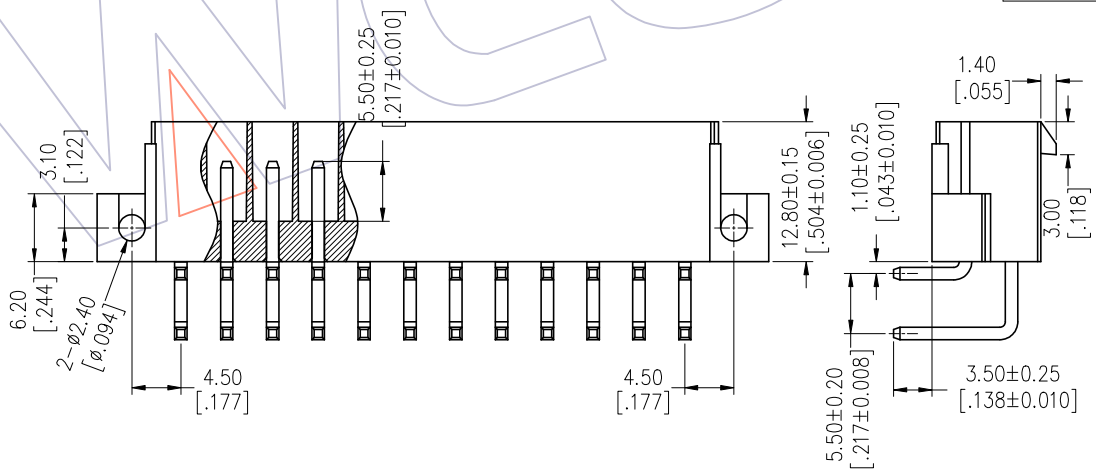

Specification & Ordering Information:

Circuit	Part No.	Dimension A	Dimension B	Pcs /Tray
2x01	WF4202−2WR01WA3	---	5.40	150
2x02	WF4202−2WR02WA3	4.20	9.60	120
2x03	WF4202−2WR03WA3	8.40	13.80	100
2x04	WF4202−2WR04WA3	12.60	18.00	80
2x05	WF4202−2WR05WA3	16.80	22.20	70
2x06	WF4202−2WR06WA3	21.00	26.40	60
2x07	WF4202−2WR07WA3	25.20	30.60	50
2x08	WF4202−2WR08WA3	29.40	34.80	50
2x09	WF4202−2WR09WA3	33.60	39.00	40
2x10	WF4202−2WR10WA3	37.80	43.20	40
2x11	WF4202−2WR11WA3	42.00	47.40	40
2x12	WF4202−2WR12WA3	46.20	51.60	30

REV	DATE	MODIFICATION DESCRIPTION	CHANGE
A2	2023/03/06	Modify Color (A2)	DuYing
A1	2019/05/15	MODIFY	Ding
A0	2012/09/19	NEW	——

OPERATION	
X.X	±0.40
X.XX	±0.25
X.XXX	±0.15
Angle	± 3°
DIM	TOL

DRAW DuYing	DATE 2023/03/06	SCALE	FIT
CHECK	DATE	UNIT	mm inch
APPROVE	DATE	SIZE	A4
		SHEET	1/2
		PROJ.	

PART NO. SEE TAB

TITLE: 4.20 MINI FIT DUAL ROW 90° WITH EAR

Customer NO.

WCON
Http: www.wcon.com
WCON-Dongguan
Tel: +86 769 85358920
Fax: +86 769 85358915
E-mail: sales@wcon.com
WCON-Kunshan
Tel: +86 512 57468408
Fax: +86 512 57468468
E-mail: salesks@wcon.com