HSF

NOTES:
Current Rating:1AMP
Contact Resistance:30mΩ max
Withstand Voltage:250V AC/DC
Insulation Resistance:1000MΩ min
Operation Temperature:-40℃ to +105℃

Contact Material:Phosphor Bronze(C5191-H)
Contact plating:Au Or Sn Over Ni
Insulator Material:PA9T+33%GF(UL94V-0)

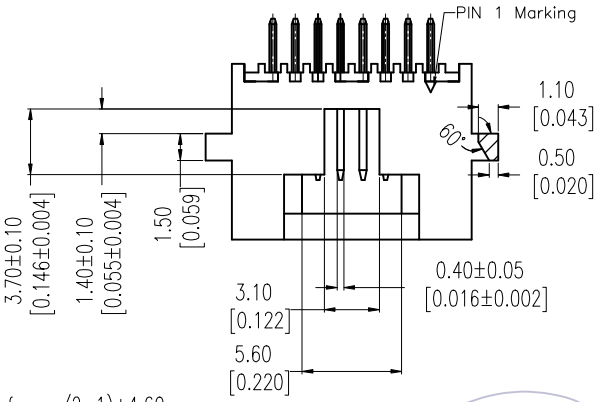

Recommended P.C.B Layout(Top Side)
(PCB BOARD TOLERANCE±0.05)

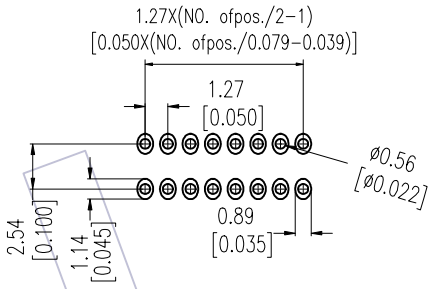

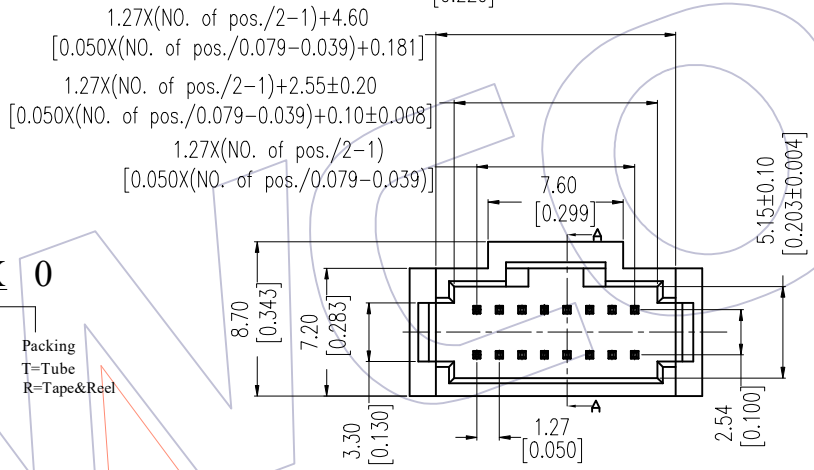

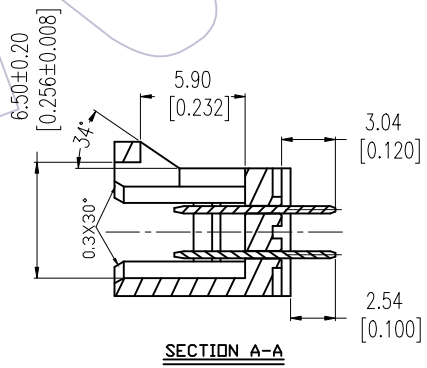

Ordering Information

WF1271 - 2WSH XX B X 0

- No.of pins Per Row: 04~50P
- Contact Plating: S0=Gold Flash/Tin, S3=10u"Gold/Tin, S4=15u"Gold/Tin, S5=30u"Gold/Tin, G0=Gold Flash, G3=10u"Gold, G4=15u"Gold, G5=30u"Gold, Blank=Tin
- Color: B=Black
- Packing: T=Tube, R=Tape&Reel

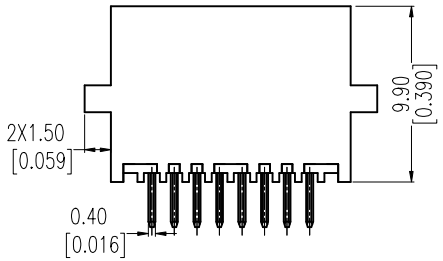

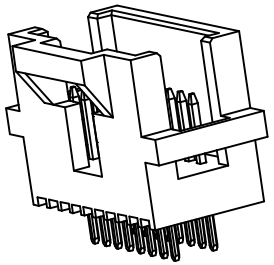

REV	DATE	MODIFICATION DESCRIPTION	CHANGE
A0	2017/01/09	NEW	——

OPERATION	
X.X	±0.40
X.XX	±0.25
X.XXX	±0.15
Angle	± 3°
DIM	TOL

DRAW	Ding	DATE	2017/01/09
CHECK		DATE	
APPROVE		DATE	

SCALE	FIT
UNIT	mm / inch
SIZE	A4
SHEET	1/1
PROJ.	

PART NO. WF1271-2WSHXXBX0

TITLE: 1.27*2.54 Wafer 180° DIP H=9.90 W/O LOGO W/T Ear (Without Fixing Hardware)

Customer NO.

WCON
Http: www.wcon.com

WCON-Dongguan
Tel: +86 769 85358920
Fax: +86 769 85358915
E-mail: sales@wcon.com

WCON-Kunshan
Tel: +86 512 57468408
Fax: +86 512 57468468
E-mail: salesks@wcon.com